FOUNDATION TYPE F1

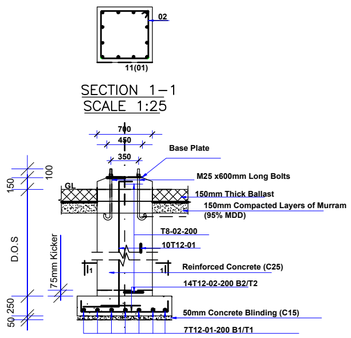

SECTION 1–1
SCALE 1:25

600X600 COLUMN C1 [4 NO. THUS]
SECTION A–A: BASE F1 ELEVATION DETAILS
SCALE 1:30

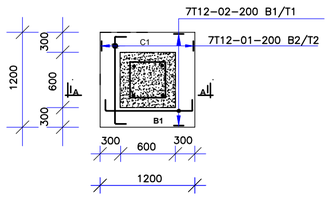

1200x1200x250mm BASE TYPE F1
SCALE 1:25

TYPICAL FOUNDATION DETAIL (A–A)
DETAILS F1

CURRENT TRANSFORMER & ISOLATORS

FOUNDATION TYPE F2

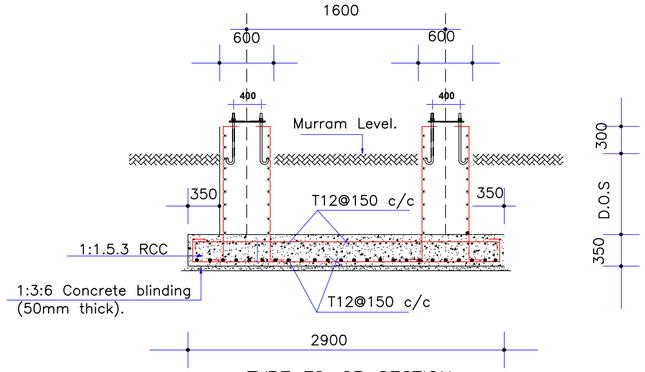

TYPE F2–CB SECTION.
~SCALE=1:25

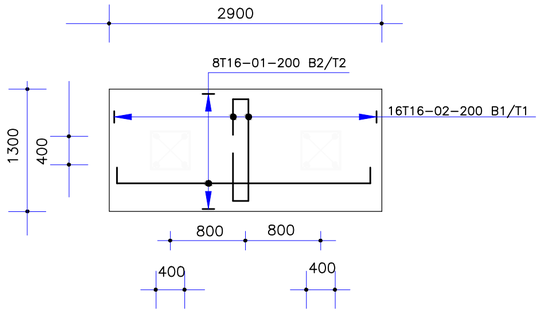

2900x1300x350mm BASE TYPE F2
SCALE 1:25

FOUNDATION TYPE F3

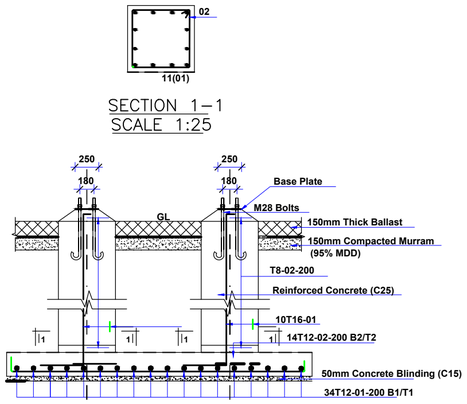

SECTION 1–1
SCALE 1:25

500X500 COLUMN C3
SECTION C–C: BASE TYPE B3 ELEVATION DETAILS
SCALE 1:30

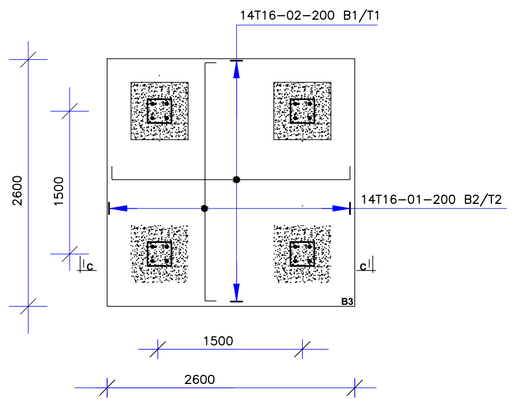

2600x2600x250 mm BASE TYPE B3
SCALE 1:25

TYPICAL FOUNDATION DETAIL(C–C)
GANTRY

FOUNDATION TYPE F4

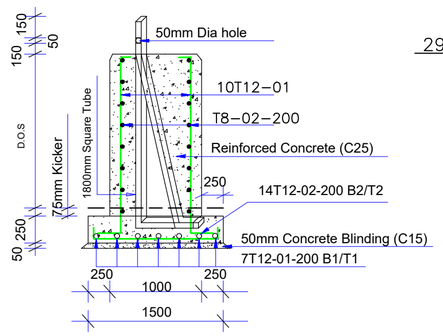

600X600 GROUND ANCHOR
SECTION A–A: BASE F4 ELEVATION DETAILS
SCALE 1:30

ALL DIMENSIONS AND LEVELS ARE TO BE VERIFIED ON SITE BY THE CONTRACTOR BEFORE COMMENCING ANY WORK.

THE COPYRIGHT IN THIS DRAWING, INCLUDING THE DESIGN AND DETAILS SHOWN HEREON, IS RESERVED BY THE ENGINEERS.

THIS DRAWING IS NOT TO USED IN WHOLE OR PART OTHER THAN FOR THE INTENDED, PURPOSE AND PROJECT, AS DEFINED ON THIS DRAWING. REFER TO THE CONTRACT FOR FULL TERMS AND AND CONDITIONS.

GENERAL NOTES:

1:THE MINIMUM 28 DAYS CONCRETE STRENGTH SHOULD BE;
COLUMN CLASS 25/30
WATER TANK & LIFT SHAFT WALLS CLASS 25/30
ALL OTHER STRUCTURAL MEMBERS CLASS 20/25

2:REINFORCEMENT TO BE HIGH YIELD RIBBED ('T') BARS WITH MINIMUM TENSILE STRENGTH OF 500N/mm2

3: MINIMUM COVER TO MAIN REINFORCEMENT TO BE;

COLUMNS	=40mm
CONCRETE WALLS	=40mm
FLOOR BEAMS	=25mm
FLOOR SLABS	=20mm
STAIRCASE	=20mm

4: MINIMUM LAPS ARE 50 x DIAMETER OF THE BAR
5: ALL REINFORCEMENT TO BE INSPECTED BY THE STRUCTURAL ENGINEER BEFORE CONCRETING
6: THE STRUCTURAL DRAWING TO BE READ IN CONJUNCTION WITH ARCHITECTURAL & M.E.P DRAWINGS
7: ALL FOUNDATIONS TO BE TAKEN DOWN TO FIRM BEARING STRATA TO ENGINEER'S APPROVAL.
8: FOUNDATIONS DESIGNED FOR ALLOWABLE BEARING PRESSURE OF 250 KN/m2

SPECIFIC NOTES:

THE SUBSTATION LEVEL ADOPTED FOR KPLC SHOULD BE AS FOLLOWS:

1. CONTROL BUILDING SHOULD BE 1 METER ABOVE SWITCH YARD LEVEL.
2. SWITCH YARD LEVEL SHOULD BE 600MM ABOVE AVERAGE ADJACENT GROUND LEVEL (TO AVOID FLOODING)
3. THE AVERAGE ROAD LEVEL SHOULD DRAIN WATER OUTSIDE THE SUBSTATION PREMISE.
4. TOP OF TRANSFORMER LEVELS TO BE 500MM ABOVE SWITCH YARD

NO.	DATE	REVISION	CHECKED	SIGN

CONSULTANT:

KENYA POWER & LIGHTING COMPANY.

Project: STANDARD SUB-STATION GENERAL ARRANGEMENT

Description: FOUNDATION DETAILS

Designed by:	Drawn by:	Checked by:

Scale	Date

Project No	Drawing. Number **L03**